MA 105 : Calculus
Division 1, Lecture 17

Prof. Sudhir R. Ghorpade
IIT Bombay

Recap of the previous lecture

- Quick review of the previous lecture
- Closed Sets and Boundary Points
- Global Extrema and Critical points
- Illustration of finding global extrema
- Constrained Extrema
- Method of Lagrange Multipliers
- Case of functions of 3 variables and multiple constraints
- Examples

Local Extremum

Let $D \subset \mathbb{R}^2$, and (x_0, y_0) be an interior point of D. We say that a function $f : D \to \mathbb{R}$ has

(i) a **local minimum** at (x_0, y_0) if there is $r > 0$ such that $B((x_0, y_0), r) \subset D$ and $f(x, y) \geq f(x_0, y_0)$ for all $(x, y) \in B((x_0, y_0), r)$.

(ii) a **local maximum** at (x_0, y_0) if there is $r > 0$ such that $B((x_0, y_0), r) \subset D$ and $f(x, y) \leq f(x_0, y_0)$ for all $(x, y) \in B((x_0, y_0), r)$.

(iii) a **local extremum** at (x_0, y_0) if it has a local maximum or a local minimum at (x_0, y_0).

Examples:

Let $f(x, y) := x^2 + y^2$ for $(x, y) \in \mathbb{R}^2$. Then f has a local minimum and $-f$ has a local maximum at $(0, 0)$. In fact, these are the global extrema of f and $-f$.

Proposition (Necessary condition for a local extremum)

Let $D \subset \mathbb{R}^2$, and let (x_0, y_0) be an interior point of D. Suppose $f : D \to \mathbb{R}$ has a local extremum at (x_0, y_0). If $\boldsymbol{u}$ is a unit vector and $(\boldsymbol{D_u} f)(x_0, y_0)$ exists, then $(\boldsymbol{D_u} f)(x_0, y_0) = 0$.

In particular, if $(\nabla f)(x_0, y_0)$ exists, then $(\nabla f)(x_0, y_0) = (0, 0)$.

Proof. Suppose $(\boldsymbol{D_u} f)(x_0, y_0)$ exists. Let E denote the set of all $(x_0 + tu_1, y_0 + tu_2)$ in D, where $t \in \mathbb{R}$. By the Carathéodory lemma for a directional derivative, there is $f_1 : E \to \mathbb{R}$ such that f_1 is continuous at (x_0, y_0), and

$$f(x_0 + tu_1, y_0 + tu_2) - f(x_0, y_0) = t\, f_1(x_0 + tu_1, y_0 + tu_2)$$

whenever $(x_0 + tu_1, y_0 + tu_2) \in D$. Suppose f has a local minimum at (x_0, y_0). Then there is $\delta > 0$ such that $f(x_0 + tu_1, y_0 + tu_2) \geq f(x_0, y_0)$ for all $t \in (-\delta, \delta)$.

Hence $f_1(x_0 + tu_1, y_0 + tu_2) \geq 0$ for all $t \in (0, \delta)$ and $f_1(x_0 + tu_1, y_0 + tu_2) \leq 0$ for all $t \in (-\delta, 0)$.

Thus $0 \leq \lim_{t \to 0^+} f_1(x_0 + tu_1, y_0 + tu_2) = f_1(x_0, y_0)$ as well as $f_1(x_0, y_0) = \lim_{t \to 0^-} f_1(x_0 + tu_1, y_0 + tu_2) \leq 0$ since f_1 is continuous at (x_0, y_0). Hence $(\boldsymbol{D_u} f)(x_0, y_0) = f_1(x_0, y_0) = 0$.

In particular, if $(\nabla f)(x_0, y_0)$ exists, then considering $\boldsymbol{u} := (1, 0)$ and $\boldsymbol{u} := (0, 1)$, we see that $(\nabla f)(x_0, y_0) = (0, 0)$.

A similar argument holds if f has a local maximum at (x_0, y_0).

The converse of the above proposition does not hold.

Example:
Let $f(x, y) := x\,y$ for $(x, y) \in \mathbb{R}^2$. Then $(\boldsymbol{D_u} f)(0, 0) = 0$ for every unit vector $\boldsymbol{u}$, but f does not have a local extremum at $(0, 0)$ since $f(0, 0) = 0$, while $f(1/n, 1/n) = 1/n^2 > 0$ and $f(1/n, -1/n) = -1/n^2 < 0$ for all $n \in \mathbb{N}$.

Saddle Point

Let (x_0, y_0) be an interior point of $D \subset \mathbb{R}^2$, and let $f : D \to \mathbb{R}$. Suppose the tangent plane to the surface $z = f(x, y)$ at (x_0, y_0) is the horizontal plane $z = f(x_0, y_0)$. (Thus if $(\nabla f)(x_0, y_0)$ exists, then $(\nabla f)(x_0, y_0) = (0, 0)$.) We say that f has a **saddle point** at (x_0, y_0) if f does not have a local extremum at (x_0, y_0).

Example: $(0, 0)$ is a saddle point of $f(x, y) := x\,y$, $(x, y) \in \mathbb{R}^2$. The surface given by $z = x\,y$ looks as follows.

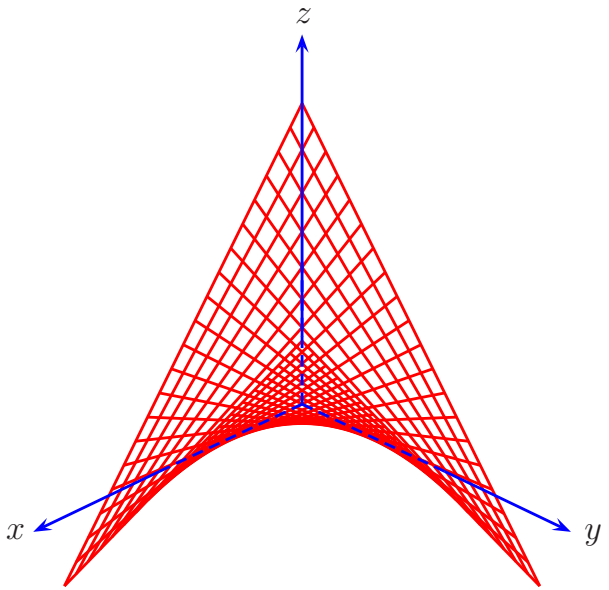

Picture of a Saddle

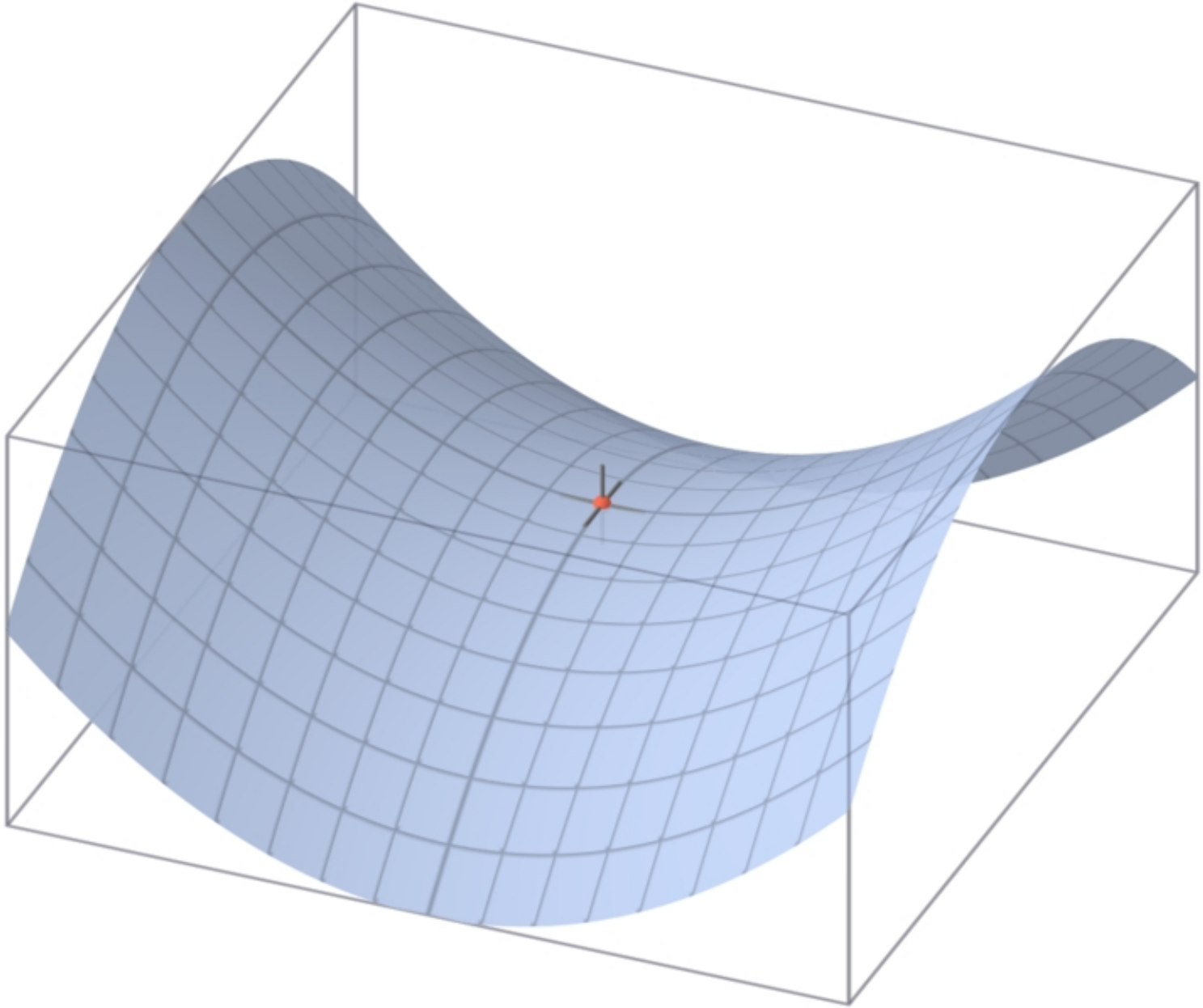

Before considering sufficient conditions for a local extremum or for a saddle point, we consider the following useful results.

Let $D \subset \mathbb{R}^2$ be such that every point of D is an interior point, and the line segment joining any two points in D lies in D. Let $(x_0, y_0), (x_1, y_1) \in D$, and consider a function $f : D \to \mathbb{R}$.

(Bivariate Mean Value Theorem)

Suppose f has continuous partial derivatives on D. Then there is $(c, d) \in D$ lying on the open line segment joining (x_0, y_0) and (x_1, y_1) such that

$$f(x_1, y_1) = f(x_0, y_0) + (x_1 - x_0) f_x(c, d) + (y_1 - y_0) f_y(c, d).$$

Proof: Use the one variable MVT for $\phi : [0, 1] \to \mathbb{R}$ defined by $\phi(t) := f(x_0 + t(x_1 - x_0), y_0 + t(y_1 - y_0))$, noting that for $t \in (0, 1)$, $\phi'(t) = (x_1 - x_0) f_x((x_0 + t(x_1 - x_0), y_0 + t(y_1 - y_0)) + (y_1 - y_0) f_y((x_0 + t(x_1 - x_0), y_0 + t(y_1 - y_0))$ by the chain rule. $\square$

To simplify the statements of extensions of the above result, let us introduce a partial differential operator

$$\mathcal{D}_{h,k} := h\frac{\partial}{\partial x} + k\frac{\partial}{\partial y}, \quad \text{where } h, k \in \mathbb{R}.$$

It can be applied to a function f which has partial derivatives. Further, by the Mixed Partials Theorem, we obtain

$$\mathcal{D}^2_{h,k} f = \mathcal{D}_{h,k}(\mathcal{D}_{h,k} f) = h^2 f_{xx} + 2hk\ f_{xy} + k^2 f_{yy}$$

if a function f has continuous partial derivatives of order ≤ 2.

(Bivariate Extended Mean Value Theorem)

Suppose f has continuous partial derivatives of order ≤ 2 on D. Let $h := x_1 - x_0$ and $k := y_1 - y_0$. Then there is $(c, d) \in D$ lying on the open line segment joining (x_0, y_0) and (x_1, y_1) with

$$f(x_1, y_1) = f(x_0, y_0) + (\mathcal{D}_{h,k} f)(x_0, y_0) + \frac{1}{2}(\mathcal{D}^2_{h,k} f)(c, d).$$

Thus $f(x_0, y_0) + (\mathcal{D}_{h,k} f)(x_0, y_0)$, or in other words,

$$f(x_0, y_0) + (x_1 - x_0) f_x(x_0, y_0) + (y_1 - y_0) f_y(x_0, y_0)$$

can be considered as an approximation of $f(x_1, y_1)$ with $(1/2)(\mathcal{D}^2_{h,k} f)(c, d)$ as the error.

More generally, we can prove the following result.

(Bivariate Taylor Theorem)

Let $n \in \mathbb{N}$. Suppose f has continuous partial derivatives of order $\leq (n+1)$ on D. Then there is $(c, d) \in D$ lying on the open line segment joining (x_0, y_0) and (x_1, y_1) such that

$$f(x_1, y_1) = \sum_{i=0}^{n} \frac{1}{i!} (\mathcal{D}^i_{h,k} f)(x_0, y_0) + R_n,$$

where $R_n := \dfrac{1}{(n+1)!} (\mathcal{D}^{n+1}_{h,k} f)(c, d)$, $h := x_1 - x_0$, $k := y_1 - y_0$.

The bivariate Taylor theorem can be proved by considering the function $\phi : [0,1] \to \mathbb{R}$ defined by

$$\phi(t) := f(x_0 + t(x_1 - x_0), y_0 + t(y_1 - y_0)),$$

and by using the one variable Taylor theorem for ϕ, as in the case of the bivariate mean value theorem. (Note: The proof involves repeated use of the Mixed Partials Theorem.)

The polynomial

$$P_n(x,y) \;:=\; \sum_{i=0}^{n} \frac{1}{i!} (\mathcal{D}^i_{x-x_0,y-y_0} f)(x_0, y_0)$$

of degree $\leq n$ is an 'approximation' of $f(x,y)$ whenever $(x,y) \in D$. It is called the nth **bivariate Taylor polynomial** of f around (x_0, y_0), and

$$R_n(x,y) := \frac{1}{(n+1)!} (\mathcal{D}^{n+1}_{x-x_0,y-y_0} f)(c,d)$$

is called the nth **Lagrange remainder** of f around (x_0, y_0).

Using the Extended Bivariate Mean Value Theorem, we obtain

Proposition (Discriminant Test)

Let $D \subset \mathbb{R}^2$ and let (x_0, y_0) be an interior point of D. Suppose $f : D \to \mathbb{R}$ is such that the first-order and second-order partial derivatives of f exist and are continuous in a neighbourhood of (x_0, y_0), and $(\nabla f)(x_0, y_0) = (0, 0)$. Consider the **discriminant**

$$(\Delta f)(x_0, y_0) := f_{xx}(x_0, y_0) f_{yy}(x_0, y_0) - f_{xy}(x_0, y_0)^2$$

of f at (x_0, y_0).

(i) If $(\Delta f)(x_0, y_0) > 0$ and $f_{xx}(x_0, y_0) < 0$, then f has a local maximum at (x_0, y_0).

(ii) If $(\Delta f)(x_0, y_0) > 0$ and $f_{xx}(x_0, y_0) > 0$, then f has a local minimum at (x_0, y_0).

(iii) If $(\Delta f)(x_0, y_0) < 0$, then f has a saddle point at (x_0, y_0).

The discriminant test is inconclusive if $(\Delta f)(x_0, y_0) = 0$.

Examples: (i) Let $f(x,y) := x^2 + y^2$ for $(x,y) \in \mathbb{R}^2$. Then $(\nabla f)(x,y) = (2x, 2y) = (0,0) \iff (x,y) = (0,0)$. Also, $(\Delta f)(0,0) = 4$ and $f_{xx}(0,0) = 2 > 0$. Hence f has a local minimum at $(0,0)$.

(ii) Let $f(x,y) := -x^2 - y^2$ for $(x,y) \in \mathbb{R}^2$. Then $(\nabla f)(x,y) = (-2x, -2y) = (0,0) \iff (x,y) = (0,0)$. Also, $(\Delta f)(0,0) = 4$ and $f_{xx}(0,0) = -2 < 0$. Hence f has a local maximum at $(0,0)$.

(iii) For $(x,y) \in \mathbb{R}^2$, let $f(x,y) := x\,y$. Then $(\nabla f)(x,y) = (y,x) = (0,0) \iff (x,y) = (0,0)$. Also, $(\Delta f)(0,0) = -1$. Hence f has a saddle point at $(0,0)$.

(iv) For $(x,y) \in \mathbb{R}^2$, let $f_1(x,y) := x^4 + y^4$, $f_2(x,y) := -x^4 - y^4$, and $f_3(x,y) := x^3 y^3$. Then $(\nabla f_i)(0,0) = (0,0)$ and $(\Delta f_i)(0,0) = 0$ for $i = 1,2,3$. We observe that f_1 has a local minimum, f_2 has a local maximum and f_3 has a saddle point at $(0,0)$.

(v) Let $f(x, y) := 4xy - x^4 - y^4$ for $(x, y) \in \mathbb{R}^2$. Then
$(\nabla f)(x, y) = (4(y - x^3), 4(x - y^3)) = (0, 0)$
$\iff (x, y) = (0, 0),\ (1, 1),$ or $(-1, -1)$.

Further, $(\Delta f)(x, y) = (-12x^2)(-12y^2) - 16 = 16(9x^2y^2 - 1)$ for $(x, y) \in \mathbb{R}^2$. In particular, $(\Delta f)(0, 0) = -16 < 0$ and $(\Delta f)(1, 1) = (\Delta f)(-1, -1) = 128 > 0$. Also, $f_{xx}(1, 1) = f_{xx}(-1, -1) = -12 < 0$. Hence f has a saddle point at $(0, 0)$ and local maxima at $(1, 1)$ and $(-1, -1)$.

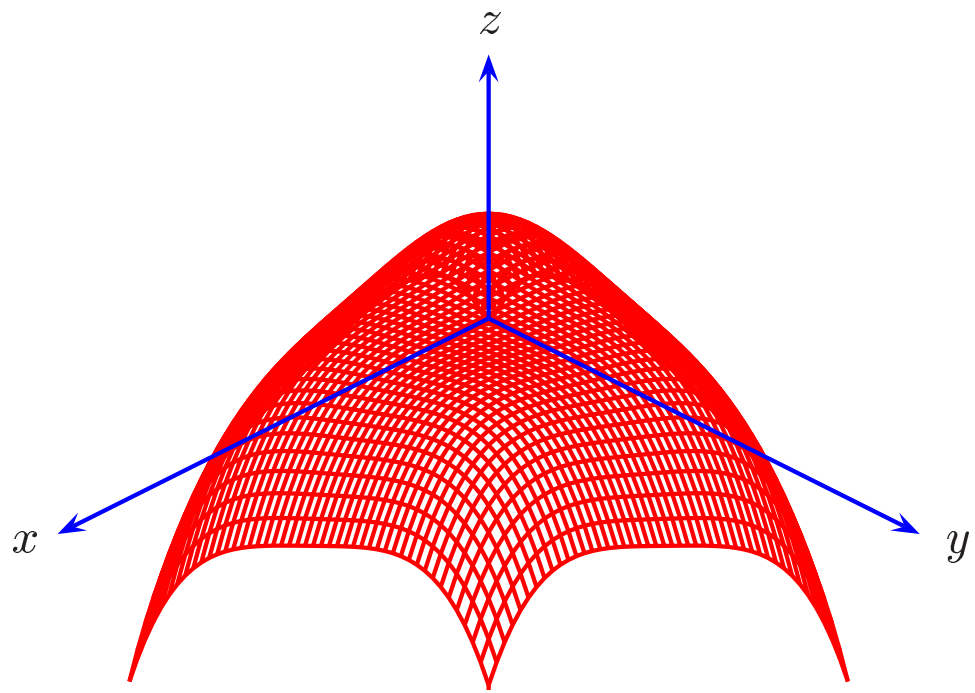

(vi) Let $f(x, y) := x \sin y$ for $(x, y) \in \mathbb{R}^2$. Then $(\nabla f)(x, y) = (\sin y,\ x \cos y) = (0, 0) \iff (x, y) = (0, k\pi)$ for $k \in \mathbb{Z}$.

Further, $(\Delta f)(x, y) = 0(-x \sin y) - \cos^2 y = -\cos^2 y$ for $(x, y) \in \mathbb{R}^2$.

In particular, $(\Delta f)(0, k\pi) = -1 < 0$ for each $k \in \mathbb{Z}$.

Hence f has a saddle point at $(0, k\pi)$ for each $k \in \mathbb{Z}$.

Double Integral on a Rectangle

The concept of the Riemann integral of a function was motivated by our attempt to find 'the area under a curve'. We now look for a concept which will let us find 'the volume under a surface'. We shall assume that the **volume** of a **cuboid** $[a,b]\times[c,d]\times[p,q]$ is equal to $(b-a)(d-c)(q-p)$.

Let $R := [a,b]\times[c,d]$ be a rectangle in $\mathbb{R}^2$ with $a<b$, $c<d$. Let $f : R \to \mathbb{R}$ be a bounded function. Define

$$m(f) := \inf\{f(x,y) : (x,y) \in R\},\ M(f) := \sup\{f(x,y) : (x,y) \in R\}.$$

Let $n, k \in \mathbb{N}$, and consider a **partition** P of R given by $P := \{(x_i, y_j) : i = 0,1,\ldots,n \text{ and } j = 0,1,\ldots,k\}$, where $a := x_0 < x_1 < \cdots < x_n := b,\ \ c = y_0 < y_1 < \cdots < y_k = d$.

The points in P divide the rectangle R into nk nonoverlapping subrectangles $[x_{i-1}, x_i]\times[y_{j-1}, y_j]$, $i = 1,\ldots,n$; $j = 1,\ldots,k$.

Define

$$\begin{aligned} m_{i,j}(f) &:= \inf\{f(x,y) : (x,y) \in [x_{i-1}, x_i] \times [y_{j-1}, y_j]\}, \\ M_{i,j}(f) &:= \sup\{f(x,y) : (x,y) \in [x_{i-1}, x_i] \times [y_{j-1}, y_j]\}. \end{aligned}$$

Clearly, $m(f) \leq m_{i,j}(f) \leq M_{i,j}(f) \leq M(f)$ for $i = 1, \ldots, n$; $j = 1, \ldots, k$.

Define the **lower double sum** and the **upper double sum** of f with respect to P by

$$\begin{aligned} L(P,f) &:= \sum_{i=1}^{n} \sum_{j=1}^{k} m_{i,j}(f)(x_i - x_{i-1})(y_j - y_{j-1}), \\ U(P,f) &:= \sum_{i=1}^{n} \sum_{j=1}^{k} M_{i,j}(f)(x_i - x_{i-1})(y_j - y_{j-1}). \end{aligned}$$

Since $\sum_{i=1}^{n}(x_i - x_{i-1}) = b - a$ and $\sum_{j=1}^{k}(y_j - y_{j-1}) = d - c$, we obtain

$$m(f)(b-a)(d-c) \leq L(P,f) \leq U(P,f) \leq M(f)(b-a)(d-c).$$

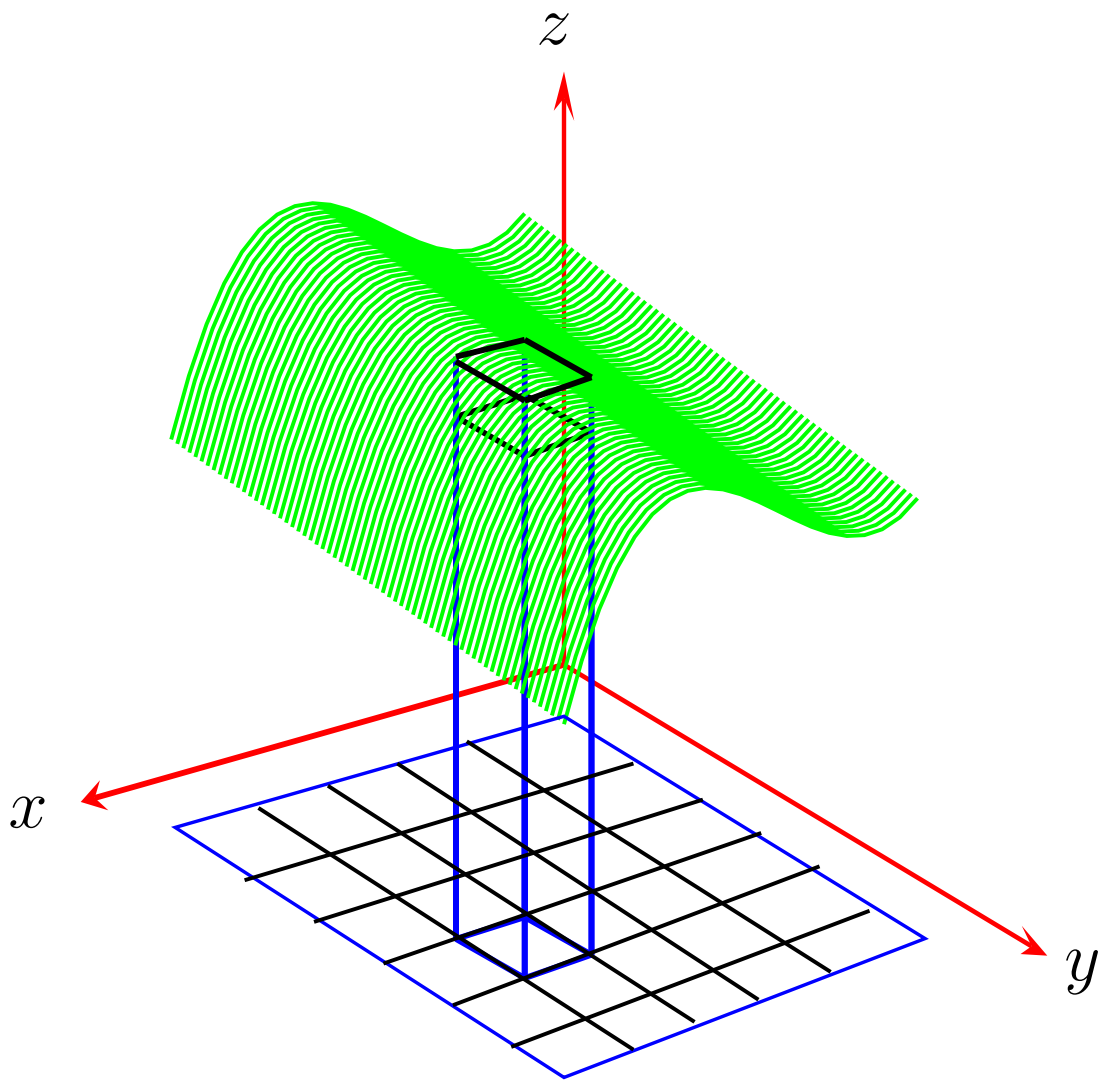

Figure: Summands of lower and upper double sums.

Let P_1 and P_2 be partitions of the rectangle R. A lower double sum increases and a upper double sum decreases when a partition is refined. Let P^* be a common refinement of P_1 and P_2. Then $L(P_1, f) \leq L(P^*, f) \leq U(P^*, f) \leq U(P_2, f)$. Define

$$\begin{aligned} L(f) &:= \sup\{L(P, f) : P \text{ is a partition of } R\}, \\ U(f) &:= \inf\{U(P, f) : P \text{ is a partition of } R\}. \end{aligned}$$

$L(f)$ is called the **lower double integral** of f and $U(f)$ is called the **upper double integral** of f.

Then $L(f) \leq U(f)$ by using the definitions of sup and inf.

Definition

A bounded function $f : R \to \mathbb{R}$ is said to be **(double) integrable** on R if $L(f) = U(f)$.

In this case, the **double integral** of f on R is the common value $U(f) = L(f)$, and it is denoted by

$$\iint_R f \quad \text{or} \quad \iint_R f(x,y)d(x,y).$$

Let $f : R \to \mathbb{R}$ be integrable and nonnegative. The double integral of f on R gives the volume of the solid $E_f := \{(x,y,z) \in \mathbb{R}^3 : (x,y) \in R \text{ and } 0 \le z \le f(x,y)\}$ under the surface $z = f(x,y)$ and above the rectangle R.

Examples:

(i) Let $f(x,y) := 1$ for all $(x,y) \in R$. Then $L(P,f) = (b-a)(d-c) = U(P,f)$ for every partition P of R. Hence f is integrable on R, and its double integral on R is equal to $(b-a)(d-c)$.

(ii) Define the **bivariate Dirichlet function** $f : R \to \mathbb{R}$ by

$$f(x,y) := \begin{cases} 1 & \text{if } x \text{ and } y \text{ are rational numbers,} \\ 0 & \text{if } x \text{ or } y \text{ is an irrational number.} \end{cases}$$

Then f is a bounded function on R. For each partition P of R,

$$m_{i,j}(f) = 0 \text{ and } M_{i,j}(f) = 1, \quad i = 1, \ldots, n;\ j = 1, \ldots, k,$$

and so $L(P, f) = 0$ and $U(P, f) = (b - a)(d - c)$. Thus $L(f) = 0$ and $U(f) = (b - a)(d - c)$. Since $L(f) \neq U(f)$, f is not integrable.

(iii) Let $\phi : [a, b] \to \mathbb{R}$ be bounded, and define $f : R \to \mathbb{R}$ by $f(x, y) := \phi(x)$ for $(x, y) \in R$. Then f is a bounded function. Let $P := \{(x_i, y_j) : i = 0, 1, \ldots, n \text{ and } j = 0, 1, \ldots, k\}$ be any partition of R. Then $P_1 := \{x_0, x_1, \ldots, x_n\}$ is a partition of $[a, b]$, and $m_{i,j}(f) = m_i(\phi)$, $i = 1, \ldots, n$; $j = 1, \ldots, k$, and so

$$\sum_{i=1}^{n}\sum_{j=1}^{n} m_{i,j}(f)(x_i - x_{i-1})(y_j - y_{j-1}) = (d-c)\sum_{i=1}^{n} m_i(\phi)(x_i - x_{i-1}).$$

Thus $L(P, f) = (d-c)L(P_1, \phi)$. Also, $U(P, f) = (d-c)U(P_1, \phi)$.

Further, if $Q := \{x_0, x_1, \ldots, x_n\}$ is a partition of $[a, b]$, then $Q = P_1$, where $P := \{(x_i, y_j) : i = 0, 1, \ldots, n,\ j = 0, 1\}$. So

$L(f) = (d - c)L(\phi)$ and $U(f) = (d - c)U(\phi)$. Hence

f is integrable on $R \iff \phi$ is integrable on $[a, b]$, and in this case, the double integral of f on R is equal to $(d - c)$ times the Riemann integral of ϕ on $[a, b]$.

The following result gives a necessary and sufficient condition for the integrability of a bounded function on R.

Theorem (Riemann condition)

Let $f : [a, b] \times [c, d] \to \mathbb{R}$ be a bounded function. Then f is integrable if and only if for every $\epsilon > 0$, there is a partition P_ϵ of $[a, b] \times [c, d]$ such that $U(P_\epsilon, f) - L(P_\epsilon, f) < \epsilon$.

The proof is very similar to the proof of the result about the Riemann condition in the one variable case.

Double Integration

The Riemann condition can be used to prove many useful results regarding double integration.

(Domain Additivity)

Let $R := [a,b]\times[c,d]$, and let $f : R \to \mathbb{R}$ be a bounded function. Let $s \in (a,b)$, $t \in (c,d)$. Then f is integrable on R if and only if f is integrable on the four subrectangles $[a,s]\times[c,t]$, $[a,s]\times[t,d]$, $[s,b]\times[c,t]$ and $[s,b]\times[t,d]$. In this case, the integral of f on R is the sum of the integrals of f on the four subrectangles.

We make the following conventions:

If $a = b$ or $c = d$, then $\int\int_{[a,b]\times[c,d]} f := 0$.

$\int\int_{[b,a]\times[c,d]} f := -\int\int_{[a,b]\times[c,d]} f$, $\int\int_{[a,b]\times[d,c]} f := -\int\int_{[a,b]\times[c,d]} f$,

$\int\int_{[b,a]\times[d,c]} f := \int\int_{[a,b]\times[c,d]} f$.

Integrable functions

Let $R := [a,b]\times[c,d]$, and let $f : R \to \mathbb{R}$.

(i) If f is monotonic in each of the two variables, then f is integrable on R.

(ii) If f is bounded on R, and has at most a finite number of discontinuities in R, then f is integrable on R.

Examples:

(i) Let $f(x,y) := [x] + [y]$ for $(x,y) \in R$. Since f is increasing in each variable, f is integrable.

(ii) Let $a, c > 0$ and $r, s \geq 0$. Define $f(x,y) = x^r y^s$ for $(x,y) \in R$. Since f is continuous on R, it is integrable.

(iii) Let $f(0,0) := 0$ and $f(x,y) := xy/(x^2+y^2)$ if $(x,y) \in [-1,1]\times[-1,1]$ and $(x,y) \neq (0,0)$. Since f is bounded on R, and it is discontinuous only at $(0,0)$, f is integrable.

Algebraic and Order Properties

Let $R := [a,b]\times[c,d]$. If $f, g : R \to \mathbb{R}$ are integrable, then

(i) $f+g$ is integrable, and $\int\int_R (f+g) = \int\int_R f + \int\int_R g$,

(ii) αf is integrable, and $\int\int_R \alpha f = \alpha \int\int_R f$ for all $\alpha \in \mathbb{R}$,

(iii) $f \cdot g$ is integrable,

(iv) If there is $\delta > 0$ such that $|f(x,y)| \geq \delta$ for all $(x,y) \in R$ (so that $1/f$ is bounded), then $1/f$ is integrable,

(v) If $f \leq g$, then $\int\int_R f \leq \int\int_R g$,

(vi) $|f|$ is integrable, and $|\int\int_R f| \leq \int\int_R |f|$.

Proof: (v) For any partition P of R, $U(P,f) \leq U(P,g)$, and so $\int\int_R f = U(f) \leq U(g) = \int\int_R g$.

(vi) $U(P,|f|) - L(P,|f|) \leq U(P,f) - L(P,f)$ for each P.
Also, $-|f| \leq f \leq |f| \implies -\int\int_R |f| \leq \int\int_R f \leq \int\int_R |f|$.

Evaluation of a Double Integral

Suppose a function is integrable on a rectangle R. How can we find its double integral?

To evaluate the Riemann integral of an integrable function f on an interval $[a, b]$, we used a powerful result known as the Fundamental Theorem of Calculus (Part II). If we find a function F on $[a, b]$ whose derivative is equal to f on $[a, b]$, then

$$\int_a^b f(x)dx = \int_a^b F'(x)dx = F(b) - F(a).$$

Later in this course, we shall see some versions of the Fundamental Theorem of Calculus for functions of two/three variables, known as the Green/Stokes theorem.

For the present, we consider an easy and widely used method for evaluating double integrals in which the problem is reduced to a repeated evaluation of Riemann integrals.