MA 105 : Calculus
Division 3, Lecture 33

Prof. Sudhir R. Ghorpade
IIT Bombay

Recap of the previous lecture

- Path independence of line integrals
- Examples. Criterion for path independence
- Fundamental Theorem of Calculus for Line Integrals
- Cross Derivative Test. Special cases
- Sufficiency of cross derivative test for continuous vector fields on simply connected domains

Let γ be a simple closed piecewise smooth path in $\mathbb{R}^2$, and let $C := \gamma([\alpha, \beta])$ denote the geometric curve in $\mathbb{R}^2$ defined by γ. Suppose $\boldsymbol{F}$ is a continuous vector field defined on C.

Since the line integral of a continuous vector field along a smooth path is invariant under a reparametrization only up to its sign, $\int_C \boldsymbol{F} \cdot d\boldsymbol{s}$ is determined only up to its sign. To determine it completely, we specify the sense or the direction in which the geometric curve C is traversed. For example, we may specify that as we travel along the curve C with $\boldsymbol{k}$ as our upright direction, the region in $\mathbb{R}^2$ enclosed by C lies on our left. In this case, the curve C is traversed **anticlockwise** (as viewed from high above the curve).

Suppose D is a bounded region in $\mathbb{R}^2$ whose boundary ∂D consists of a finite number of nonintersecting simple closed piecewise smooth geometric curves $C_1, \ldots, C_k$.

Suppose the curve C_1 is the outer boundary of D.

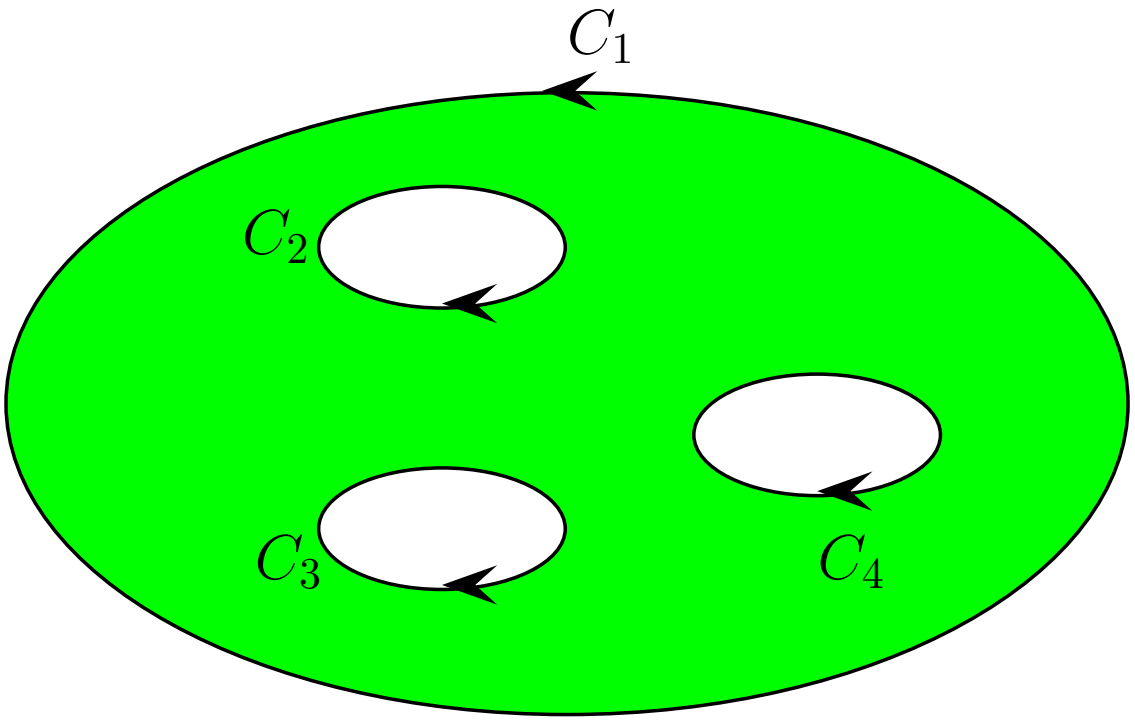

If the outer boundary curve C_1 of D is traversed anticlockwise, but the inner boundary curves $C_2, \ldots, C_k$ are traversed clockwise, then we say that the boundary ∂D of the region D is **positively oriented**. In this case, the region D is on our left as we travel along any part of its boundary (with $\boldsymbol{k}$ as our upright direction).

The Green Theorem

We have defined line integrals in terms of Riemann integrals. An important result of Green relates line integrals along the boundary of a domain to double integrals over the domain. It can be viewed as a two-dimensional analogue of Part II of the Fundamental Theorem of Calculus for Riemann integrals and for line integrals.

Theorem

Let D be a closed and bounded subset of $\mathbb{R}^2$ such that the boundary ∂D of D consists of a finite number of nonintersecting simple closed piecewise smooth curves, and suppose it is positively oriented. Let $\boldsymbol{F} := (P, Q)$ be a smooth vector field on an open subset Ω of $\mathbb{R}^2$ containing D. Then

$$\int_{\partial D} P\, dx + Q\, dy = \iint_D (Q_x - P_y) d(x, y).$$

Proof. The LHS is well-defined since P and Q are continuous on ∂D, while the RHS is well-defined since Q_x and P_y are continuous on D and since ∂D is of two-dimensional content zero (as shown in Lecture 25).

First suppose D is an elementary region of type I, and

$$D := \{(x, y) \in \mathbb{R}^2 : a \leq x \leq b \text{ and } \phi_1(x) \leq y \leq \phi_2(x)\},$$

where $\phi_1, \phi_2 : [a, b] \to \mathbb{R}$ are continuous and $\phi_1 \leq \phi_2$.

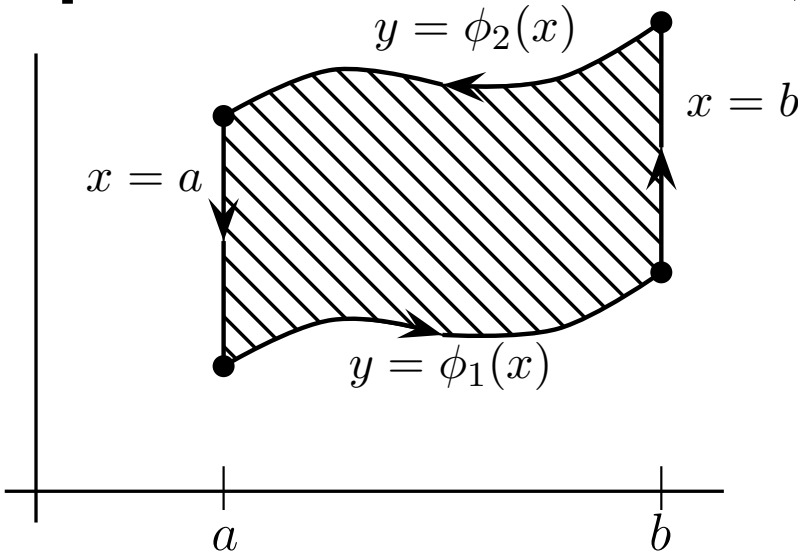

Clearly,

$$\int_{\partial D} P\, dx = \int_a^b P(x, \phi_1(x))dx + 0 + \int_b^a P(x, \phi_2(x))dx + 0$$

which is equal to $\int_a^b \big(P(x,\phi_1(x)) - P(x,\phi_2(x))\big)\,dx$.

On the other hand, the Fubini theorem and the FTC show that

$$\begin{aligned}\iint_D P_y\, d(x,y) &= \int_a^b \left(\int_{\phi_1(x)}^{\phi_2(x)} P_y\, dy \right) dx \\ &= \int_a^b \big(P(x,\phi_2(x)) - P(x,\phi_1(x))\big)\,dx.\end{aligned}$$

Thus $\displaystyle\int_{\partial D} P\, dx = -\iint_D P_y\, d(x,y)$.

Next, suppose D is an elementary region of type II, and

$$D := \{(x,y) \in \mathbb{R}^2 : c \le y \le d \text{ and } \psi_1(y) \le x \le \psi_2(y)\},$$

where $\psi_1, \psi_2 : [c,d] \to \mathbb{R}$ are continuous and $\psi_1 \le \psi_2$.

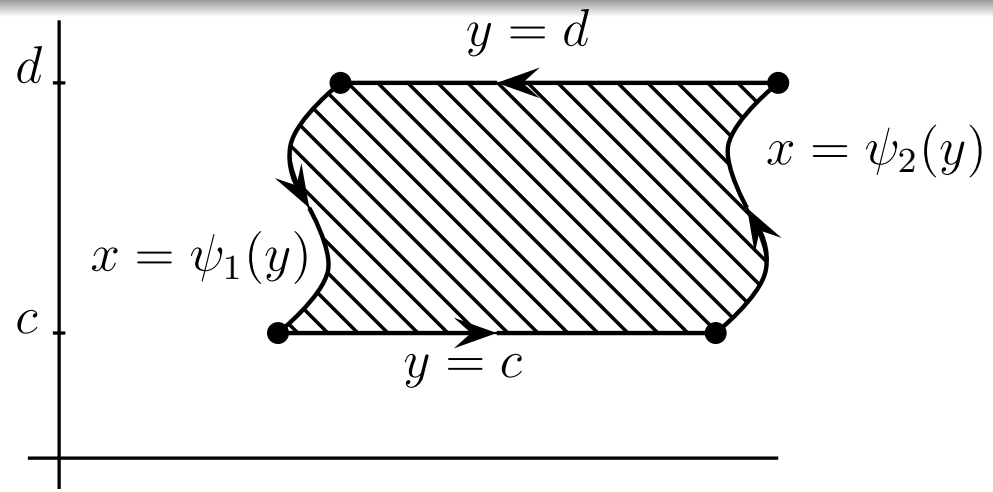

Clearly,

$$\int_{\partial D} Q\,dy \;=\; \int_c^d Q(\psi_2(y), y)dy + 0 + \int_d^c Q(\psi_1(y), y)dy + 0$$

which is equal to $\int_c^d \big(Q(\psi_2(y), y) - Q(\psi_1(y), y)\big)dy$.

On the other hand, the Fubini theorem and the FTC show that

$$\begin{aligned}\iint_D Q_x\,d(x,y) &= \int_c^d \left(\int_{\psi_1(y)}^{\psi_2(y)} Q_x\,dx\right)dy \\ &= \int_c^d \big(Q(\psi_2(y), y) - Q(\psi_1(y), y)\big)\,dy.\end{aligned}$$

Thus $\int_{\partial D} Q\,dy = \iint_D Q_x\,d(x,y)$.

If D is an elementary region of type I as well as of type II, we may combine the two equalities proved above, and obtain

$$\int_{\partial D} P\,dx + Q\,dy = \iint_D (Q_x - P_y)d(x,y).$$

This proof applies when D is a rectangle or a disk. It can be modified to treat the case where D is simply connected, so that ∂D has only the outer component. Further, the general case of a **multiply connected** domain D can be treated by introducing cuts as shown below.

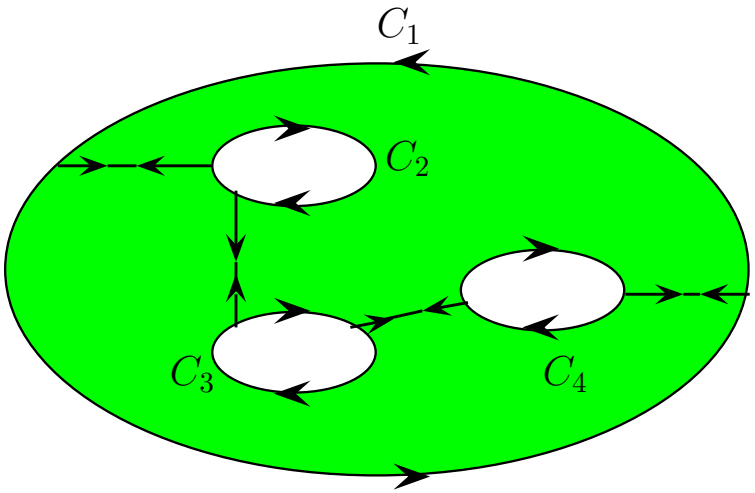

Computational Uses of the Green Theorem

(i) Calculation of a double integral

Example: Finding the area of a subset of $\mathbb{R}^2$

Let D be a closed and bounded subset of $\mathbb{R}^2$ whose positively oriented boundary ∂D consists of a finite number of nonintersecting simple piecewise smooth closed curves. Then

$$\text{Area}\,(D) := \iint_D 1_D d(x,y).$$

Let P, Q be smooth functions on an open subset containing D such that $Q_x - P_y = 1$ on D. By the Green theorem,

$$\text{Area}\,(D) = \iint_D (Q_x - P_y) d(x,y) = \int_{\partial D} P\ dx + Q\ dy.$$

For instance, for $(x,y) \in D$, we may let

$$P(x,y) := -\frac{y}{2} \quad \text{and} \quad Q(x,y) := \frac{x}{2}.$$

Then clearly $Q_x - P_y = (1/2) + (1/2) = 1$ on D, and so

$$\text{Area}\,(D) = \frac{1}{2}\int_{\partial D} x\ dy - y\ dx.$$

We note that Area (D) is also equal to

$$\int_{\partial D} x\,dy \quad \text{or} \quad -\int_{\partial D} y\,dx$$

if we let $Q(x,y) := x$, $P := 0$, or $P(x,y) := -y$, $Q := 0$.

Suppose the positively oriented boundary ∂D of D is parametrized by $(x(t), y(t))$, $t \in [\alpha, \beta]$. Then

$$\text{Area}\,(D) = \frac{1}{2}\int_{\alpha}^{\beta} \big(x(t)y'(t) - y(t)x'(t)\big)\,dt = \frac{1}{2}\int_{\alpha}^{\beta} W(x,y)(t)dt,$$

where $W(x,y) := \det\begin{bmatrix} x & y \\ x' & y' \end{bmatrix}$ is called the **Wronskian** of x, y.

As a special case, suppose ∂D is given by a polar equation

$$r = p(\theta) \quad \text{for } \theta \in [\alpha, \beta].$$

Let $x(\theta) := p(\theta)\cos\theta$ and $y(\theta) := p(\theta)\sin\theta$ for $\theta \in [\alpha, \beta]$. Then

$$W(x,y)(\theta) = \det \begin{bmatrix} p(\theta)\cos\theta & p(\theta)\sin\theta \\ p'(\theta)\cos\theta - p(\theta)\sin\theta & p'(\theta)\sin\theta + p(\theta)\cos\theta \end{bmatrix},$$

which is equal to $p^2(\theta)$, and so

$$\text{Area}\,(D) = \frac{1}{2}\int_\alpha^\beta p^2(\theta)d\theta,$$

as we had defined earlier. For instance, the area enclosed by the cardioid given by $r = a(1-\cos\theta)$, $\theta \in [-\pi, \pi]$, is equal to

$$\frac{1}{2}\int_{-\pi}^{\pi} a^2(1 - 2\cos\theta + \cos^2\theta)d\theta = \frac{3\pi a^2}{2}.$$

(ii) Calculation of the line integral along an oriented boundary

Example:

Let $D := \{(x, y) \in \mathbb{R}^2 : x^2 + y^2 \leq 1 \text{ and } y \geq 0\}$, so that its positively oriented boundary ∂D consists of the line segment from $(-1, 0)$ to $(1, 0)$ followed by the semicircle in the upper half-plane having radius 1 and centre $(0, 0)$. Let $P(x, y) := y^2$ and $Q(x, y) := 3xy$ for $(x, y) \in \mathbb{R}^2$.

To calculate $\int_{\partial D} P\,dx + Q\,dy$, we may use the Green theorem and obtain

$$\int_{\partial D} y^2 dx + 3xy\,dy = \iint_D \left[\frac{\partial}{\partial x}(3x\,y) - \frac{\partial}{\partial y}(y^2)\right] d(x, y)$$

$$= \int_{-1}^{1} \left(\int_0^{\sqrt{1-x^2}} y\ dy \right) dx = \int_{-1}^{1} \frac{1 - x^2}{2} dx = \frac{2}{3}.$$

Consequences of the Green Theorem

Proposition

Let $\boldsymbol{F} := (P, Q)$ be a smooth vector field on an open subset containing a closed and bounded subset D of $\mathbb{R}^2$ such that $Q_x = P_y$ on D. If ∂D consists of a finite number of nonintersecting simple closed piecewise smooth curves, and if ∂D is positively oriented, then

$$\int_{\partial D} \boldsymbol{F} \cdot d\boldsymbol{s} = \int_{\partial D} P\ dx + Q\ dy = 0.$$

Proof

By the Green theorem,

$$\int_{\partial D} \boldsymbol{F} \cdot d\boldsymbol{s} = \iint_D (Q_x - P_y) d(x, y) = \iint_D 0\, d(x, y) = 0. \quad \square$$

Invariance of Some Line Integrals

Suppose C_1 and C_2 are simple closed piecewise smooth curves such that C_2 lies in the interior of C_1, that is, C_1 encloses C_2, and suppose both are oriented counterclockwise. Let P, Q be smooth scalar fields satisfying $Q_x = P_y$ on an open set containing C_1, C_2 and the region between them. Then

$$\int_{C_1} P\ dx + Q\ dy = \int_{C_2} P\ dx + Q\ dy.$$

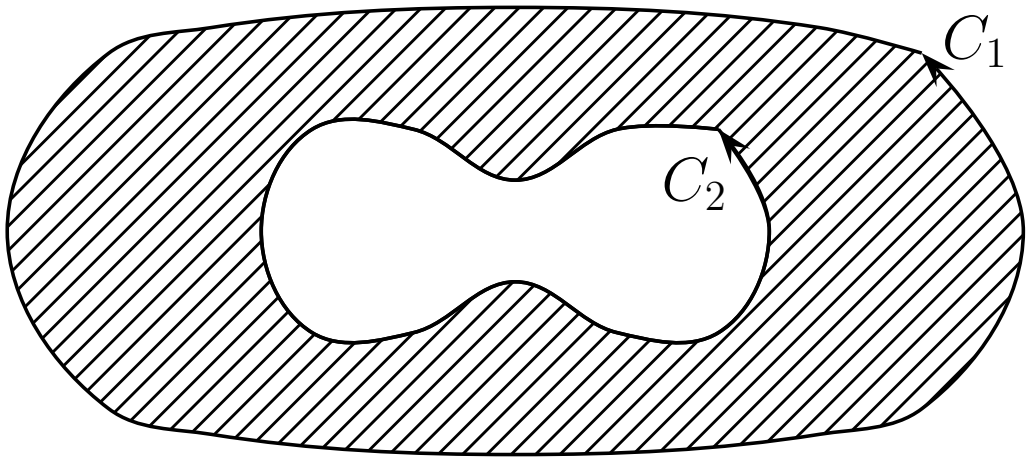

This result follows by applying the Green theorem to the subset D of $\mathbb{R}^2$ consisting of C_1, C_2 and the region between them, and by noting that $\partial D = C_1 + (-C_2)$.

This is known as the deformation principle for line integrals along paths in $\mathbb{R}^2$.

Example: (Gauss Law in $\mathbb{R}^2$): Let C be a piecewise smooth simple closed geometric curve in $\mathbb{R}^2$, and let D denote the union of C and the region enclosed by C, so that $\partial D = C$. Suppose $(0,0) \notin C$, and C is positively oriented. Then

$$\int_C \frac{\tilde{\boldsymbol{r}}}{r^2} \cdot d\boldsymbol{s} = \begin{cases} 0 & \text{if } (0,0) \notin D, \\ 2\pi & \text{if } (0,0) \in D, \end{cases}$$

where $\tilde{\boldsymbol{r}}(x,y) := (-y,x)$ and $r(x,y) := \|(x,y)\|$, $(x,y) \in \mathbb{R}^2$.

Proof. Let $\boldsymbol{F} := \tilde{\boldsymbol{r}}/r^2$, that is, $\boldsymbol{F} := (P,Q)$, where $P = -y/r^2 = -y/(x^2+y^2)$ and $Q := x/r^2 = x/(x^2+y^2)$ for $\boldsymbol{r} \neq \boldsymbol{0}$. Then $Q_x - P_y = 0$ on $D \setminus \{(0,0)\}$ as we saw earlier.

First, let $(0,0) \notin D$. Then the vector field $\boldsymbol{F}$ is smooth on D. Hence $\int_C \boldsymbol{F} \cdot d\boldsymbol{s} = \int_{\partial D} \boldsymbol{F} \cdot d\boldsymbol{s} = \iint_D (Q_x - P_y) d(x,y) = 0$ by the Green theorem.

Next, let $(0,0) \in D$. We have seen earlier that $\int_{C_1} \boldsymbol{F} \cdot d\boldsymbol{s} = 2\pi$, where C_1 denotes the standard parametrized unit circle in $\mathbb{R}^2$ (which is positively oriented). Since $(0,0)$ is an interior point of D, there is $\epsilon > 0$ such that the closed disk of radius ϵ and center $(0,0)$ lies inside D. Let C_ϵ denote the standard parametrized circle of radius ϵ (which is also positively oriented). Then

$$\int_C \boldsymbol{F} \cdot d\boldsymbol{s} = \int_{C_\epsilon} \boldsymbol{F} \cdot d\boldsymbol{s} = \int_{C_1} \boldsymbol{F} \cdot d\boldsymbol{s} = 2\pi$$

by the deformation principle for line integrals, applied first to the curves C and C_ϵ, and then to the curves C_ϵ and C_1. □

Proposition

Let Ω be a simply connected open subset of $\mathbb{R}^2$, and let $\boldsymbol{F} := (P, Q)$ be a smooth vector field such that $Q_x = P_y$ on Ω. Then $\boldsymbol{F}$ is a gradient field on Ω.

Proof. Let C denote a simple closed smooth curve in Ω. Since Ω is simply connected, C encloses points of Ω only. Let D denote the set of points on and inside C. By the Green theorem, $\int_C \boldsymbol{F} \cdot d\boldsymbol{s} = \iint_D (Q_x - P_y) d(x, y) = 0$. This also holds if a smooth closed curve C in Ω intersects itself, since we can break up C into several simple closed smooth curves. As a result, line integrals of $\boldsymbol{F}$ are path-independent in D. □

Recall the differential notation for a regular smooth curve γ:

$ds = \|\gamma'(t)\| dt$, $d\boldsymbol{s} = \gamma'(t) dt$, $\hat{\boldsymbol{t}} = \gamma'(t)/\|\gamma'(t)\|$, $d\boldsymbol{s} = \hat{\boldsymbol{t}}\, ds$,

$\hat{\boldsymbol{n}} = \hat{\boldsymbol{t}} \times \boldsymbol{k}$. If $\boldsymbol{F} := (P, Q)$, then $\boldsymbol{F} \cdot \hat{\boldsymbol{n}}\, ds = P\, dy - Q\, dx$.

Alternative Formulations of the Green Formula

We can express the conclusion of the Green theorem, namely,

$$\int_{\partial D} \boldsymbol{F} \cdot d\boldsymbol{s} = \int_{\partial D} P\,dx + Q\,dy = \iint_D \left(\frac{\partial Q}{\partial x} - \frac{\partial P}{\partial y}\right) d(x,y).$$

as follows.

(i) Circulation-Curl Form or Tangential Form:

$$\int_{\partial D} \boldsymbol{F} \cdot \hat{\boldsymbol{t}}\, ds = \iint_D (\operatorname{curl} \boldsymbol{F}) \cdot \boldsymbol{k}\, d(x,y). \quad [\text{Let } \boldsymbol{F} := (P, Q, 0).]$$

(The Stokes theorem is a 3-dimensional curved version of this.)

(ii) Flux-Divergence Form or Normal Form:

$$\int_{\partial D} \boldsymbol{F} \cdot \hat{\boldsymbol{n}}\, ds = \iint_D (\operatorname{div} \boldsymbol{F}) d(x,y). \quad [\text{Let } \boldsymbol{F} := (Q, -P, 0).]$$

(The Gauss theorem is a 3-dimensional analogue of this.)